Faucet Repair

DAYTON DAVIS
INSTRUCTOR

The History of The Faucet

Have you ever turned on the water to fill your tub and wondered about the history of your faucet?

The History of The Faucet

The faucet has an interesting history that traces back to ancient times.

As early as 1700 B.C., plumbing and faucets were being used to control the water to fountains and private homes.

The Romans utilized plumbing and faucets to run water to 11 public baths, 856 private baths, and 1,352 cisterns and fountains.

The History of The Faucet

Faucets started out with two handles for hot and cold water. If you were running a bath, you turned on the hot water faucet and the cold-water faucet.

However, in 1937, Al Moen burned his hands in the hot water and decided to design a single-handled faucet. His first design was rejected and between 1940 and 1945, he finally succeeded in designing a functioning, single-handled faucet.

Finally, people would be able to adjust the temperature of one stream of water until they found their desired temperature.

The History of The Faucet

Many others continued to improve upon the design of the faucet.

In 1945, Landis Perry came up with the design for a ball valve for faucets.

The Delta single-handle faucet was the first faucet to utilize the ball valve.

Wolverine Brass also added to the functionality of faucets by designing ceramic discs for water control.

The discs last longer than rubber and provide better control.

The History of The Faucet

As time marched on, more and more improvements were made to faucets. Some of these improvements include filters to reduce contaminants, spray hoses that can be pulled out from the sink, electronic faucets, and faucets designed for the handicapped.

Electronic faucets are becoming the norm in public bathrooms because users do not have to touch the handles to turn the water on.

They simply hold their hands in front of a sensor and the water turns on, making these faucets more hygienic than traditional faucets.

It will be interesting to see what the future holds for the world of faucets.

Background

A faucet is a device for delivering water from a plumbing system. It can consist of the following components: spout, handle(s), lift rod, cartridge, aerator, mixing chamber, and water inlets.

When the handle is turned on, the valve opens and controls the water flow adjustment under any water or temperature condition.

The faucet body is usually made of **brass,** though die-cast zinc and chrome-plated plastic are also used.

Background

The majority of residential faucets are single or dual-control cartridge faucets. Some single-control types use a metal or plastic core, which operates vertically.

Others use a metal ball, with spring-loaded rubber seals recessed into the faucet body.

The less expensive dual-control faucets contain nylon cartridges with rubber seals.

Some faucets have a ceramic-disc cartridge that is much more durable.

Background

Faucets must comply with water conservation laws.

In the United States, bath basin faucets are now limited to 2 gal (7.6 L) of water per minute, while tub and shower faucets are limited to 2.5 gal (9.5 L).

Faucets run an average of eight minutes per Capita Per Day (PCD), according to a study by the American Water Works Association Research Foundation completed in 1999 that was based on water use data collected from 1,188 residences.

In daily PCD use indoor water use was at 69 gal (261 L), with faucet use third highest at 11 gal (41.6 L)PCD. In residences with water-conserving fixtures, faucets moved up to second at 11 gal (41.6 L) PCD. Faucet use was strongly related to household size.

The addition of teens and adults increases water use.

Faucet use is also negatively related to the number of persons working outside the home and is lower for those who have an automatic **dishwasher.**

Quality Control

Faucets must also pass several environmental regulations.

The National Sanitation Foundation 61 regulation, which limits contaminants in drinking water (lead is ppb [parts per billion] in water from endpoint devices), applies to kitchen faucets, lavatory faucets and drinking water dispensers.

Other laws are more strict—California's Proposition 65 limits the allowable lead to 5 ppb for a consumer faucet.

There are also plumbing codes to deal with, which can vary from city to city. Many now require antiscald tub and shower faucets.

To receive NSF Certification of a faucet, manufacturers first submit a list of all materials including the formulation used in the product.

NSF Toxicologists then review the material formulations to determine potential contaminants that may extract from the faucet and into the drinking water.

NSF then conducts an inspection of the manufacturing facility to verify material formulations, material suppliers, quality control procedures and operations.

Product samples are randomly selected for testing at NSF laboratories.

Faucets undergo a rigorous three-week testing sequence, where they are filled with an extractant water specified in the Standard. Selected water samples are analyzed for contaminants.

NSF toxicologists compare the contaminant levels to the maximum allowable levels established in ANSI/NSF Standard 61. If all contaminant levels of the product meet the requirements of the Standard, the product can be certified.

Only then is the manufacturer allowed to display the NSF Mark on the product signifying NSF Certification.

To become certified, some manufacturers have had to completely modify their manufacturing process, such as switching to a purer brass material or adding a finishing rinse process.

Maintenance and Troubleshooting Faucets

- This section will explain the basics of faucet repair, tools and material needed. There are many different types of faucets and repair kits available. Knowing what style will assist in ordering and keeping parts to keep on hand for these repairs.

Before you can start thinking about making repairs to your faucet, you need to first determine what kind of faucet you are dealing with.
There are four types of faucets in common use in America today:
Compression faucets, and the so-called "washerless faucets" - cartridge faucets, ball faucets and disc faucets.

Stem Identification

Faucet stem identification can be found on-line.

There are several on-line avenues such as BrassCraft that offers a complete PDF list of stems, handles, spline ID. 131 pages that should assist you in identifying any stem available.

KISSLER also has a 172 page PDF that identifies numerous kits, stem components, and compression items.

There is great variety of aids to assist in identifying any stem that's available, also your plumbing representative should have a source of stem identification.

Faucet Stems, Compression, Washerless, & Ceramic.

A kitchen or bathroom faucet can leak from the spout for a variety of reasons. One of the most common reasons is the faucet stem is worn or damaged.

Compression faucets are the traditional old style faucets with two handles, one each for cold and hot. Inside each handle is a valve that opens to allow water to flow and close to block the flow. A rubber washer on the base of the valve gets "compressed" to block any small amounts of water from flowing and causing drips.

Replacing a Faulty Washer

Fixing Compression-type Faucet Leaks

Required Tools:

- Wrench, screwdriver

Required Materials:

- Washer – flat or beveled identical to old washer

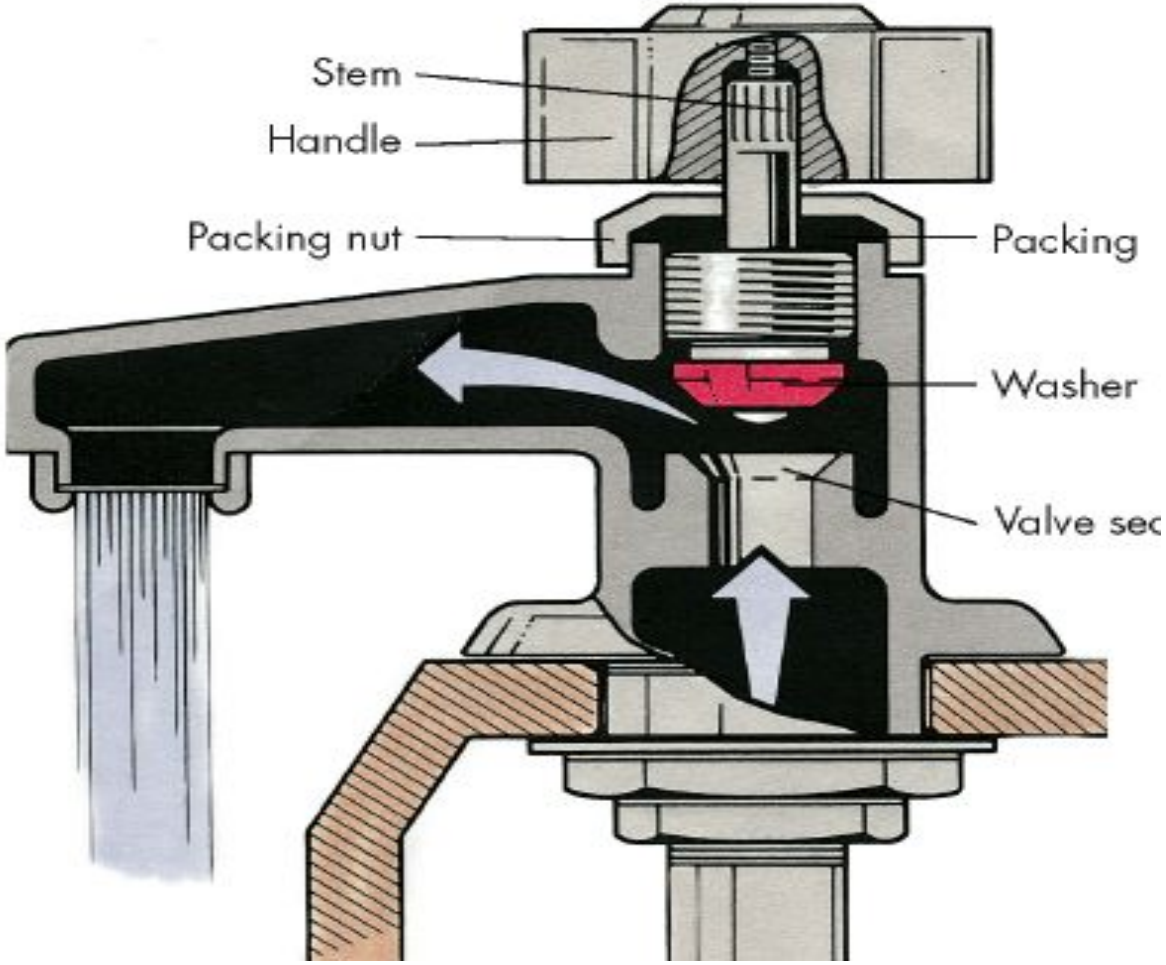

Cartridge faucets can be either single handled or two handled. The inside of the faucet has a stem cartridge that moves up and down to control water flow. Single handled cartridge faucets operate up and down to regulate water flow, and left and right to control temperature. Two handled cartridge faucets look similar to compression faucets, but feel different since they stop water flow without you having to actually "turn off" or compress a washer.

Cartridge Faucet Repairs

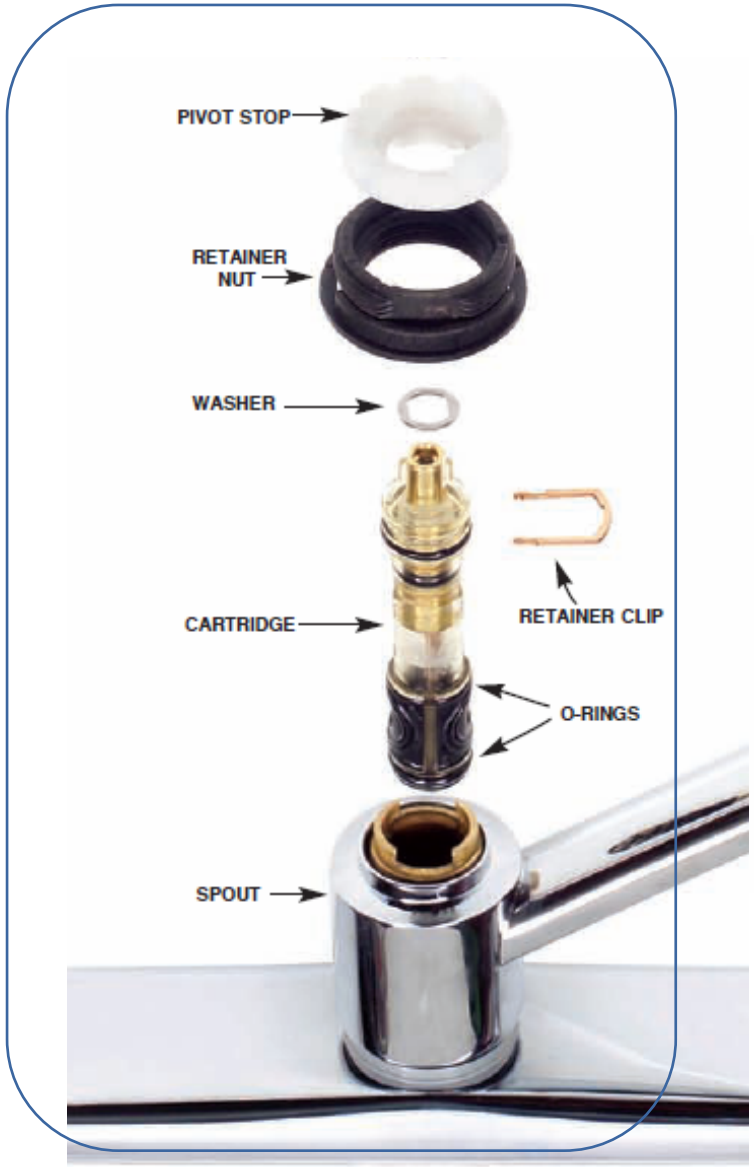

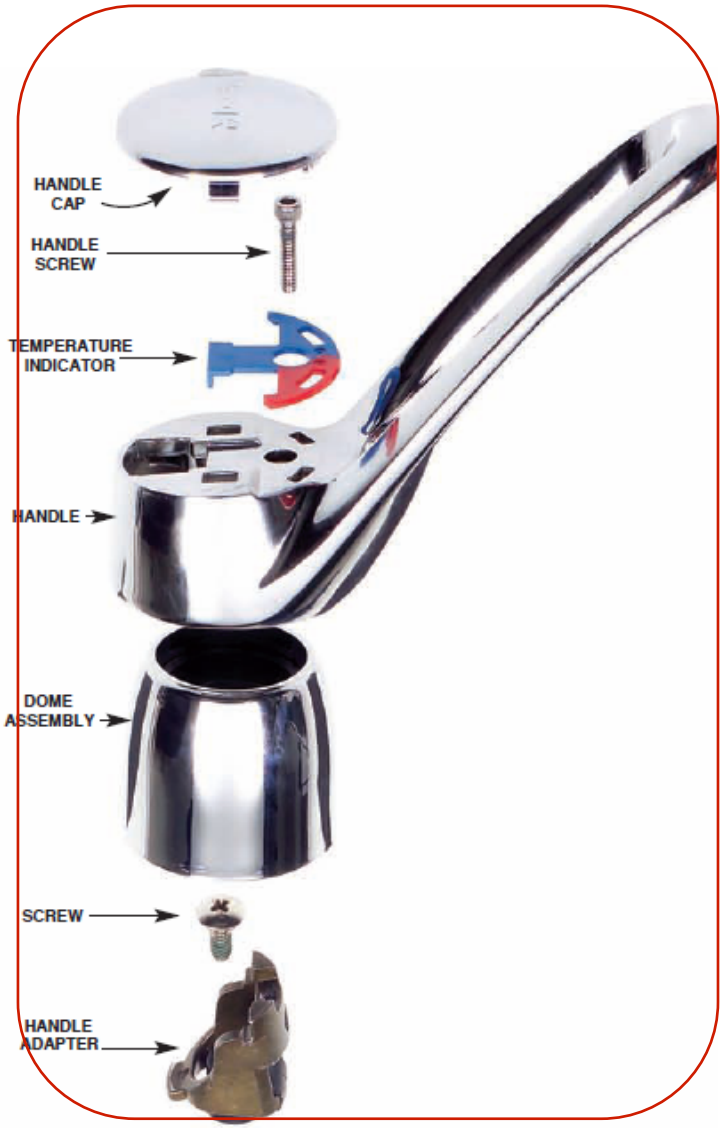

Ball faucets are easy to identify since they have a single handle that attaches to the faucet base with a round base. The ball shaped control has chambers built into it to control water volume and mix hot and cold.

Ball Faucet Repairs

Major brands include Delta, Moen and Peerless

Required Tools:

- Allen Wrench, channel locks

Required Materials:

- Repair kit that includes ball, springs, seats and O-rings for the spout

Disc faucets are the most recent development in faucet technology. Once again they are single handled with a cylindrical shaped body. Inside the faucet are ceramic discs that slide over each other, controlling flow and temperature.

HC-002

Faucet Repair Basics

No matter what kind of faucet you are dealing with, there are some basics when it comes to repairing any of them.

•First turn off the water to the faucet. There maybe individual water shut-off valves under the sink or you may need to shut off the main water supply for the house.

•Open taps and let any water in the pipe drain out.

•Put the drain stopper or a towel in the sink (in case you drop anything you don't want it going down the drain).

•To make sure you get the right replacement parts, take any parts you remove from the faucet with you to the plumbing supply store. That way you'll be sure to get an exact match.

Replacing O-Rings

Leaks Around Base of Spout

Required Tools: screwdriver, Channel Locks
Required Materials: O-rings, plumber's grease

Replacing a Faucet

Required Tools:

- Basin Wrench
- Crescent Wrench

Required Materials:

- Plumbers' putty or gasket (if supplied with new faucet)
- Thread Sealant

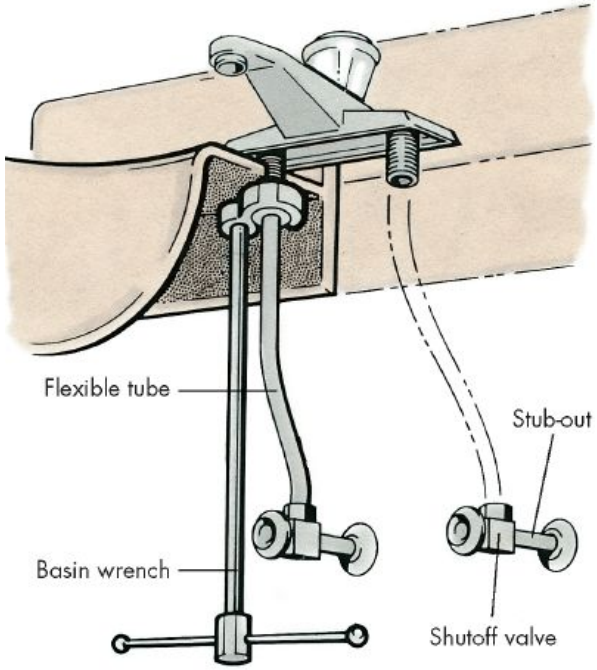

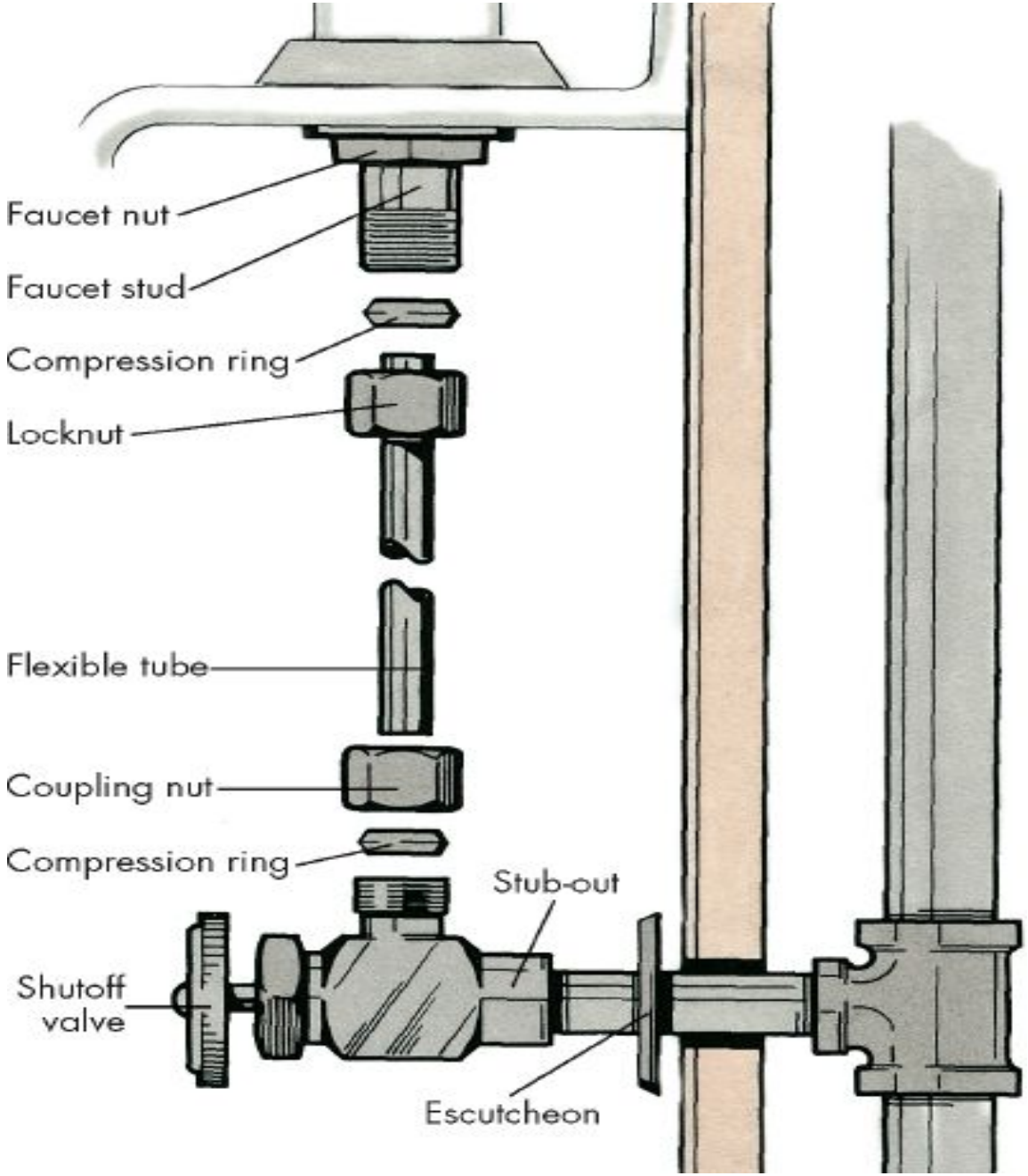

Repairing a Spray Hose

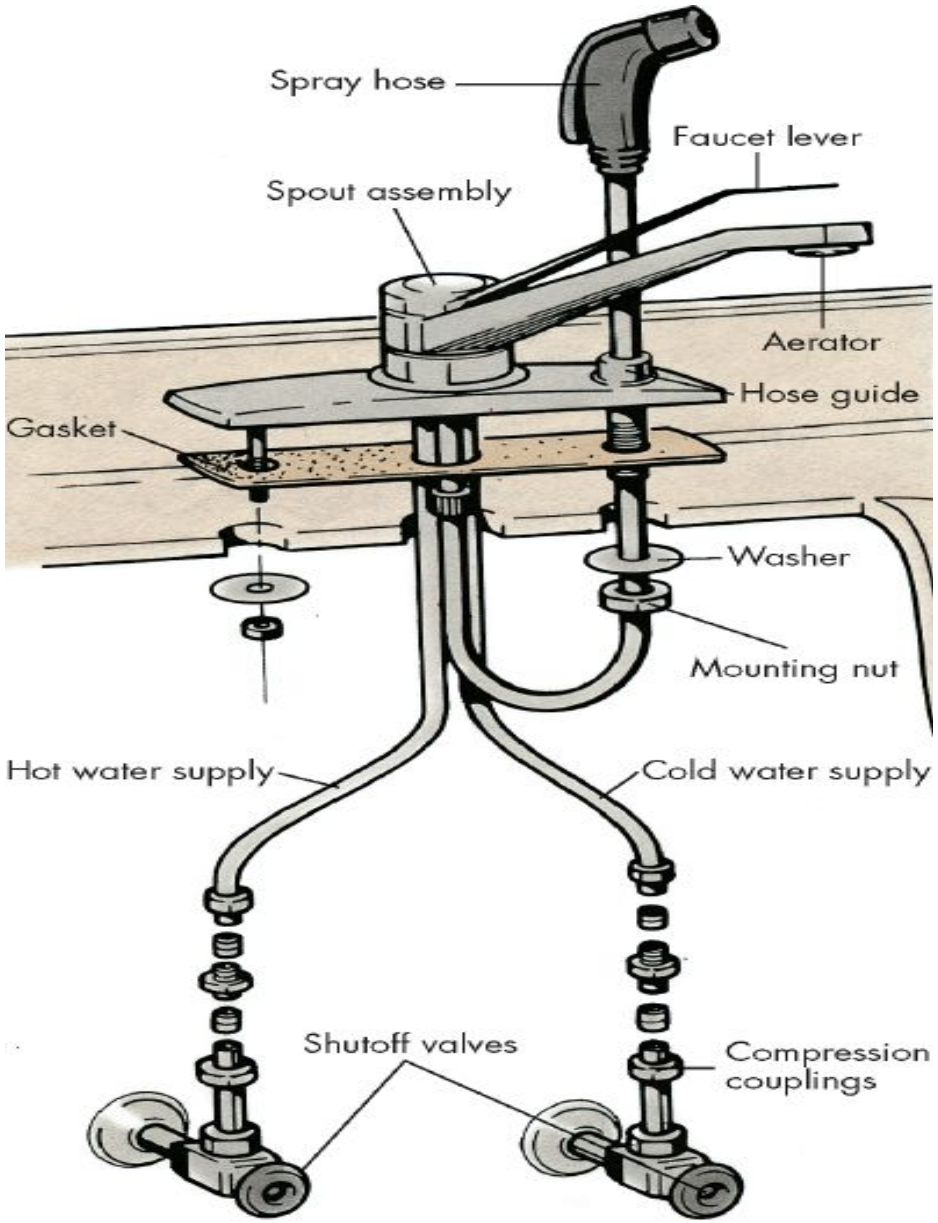

A spray hose is attached under the sink at the base of the spout assembly. The entire spray assembly can be removed from the top of the sink by unscrewing it and pulling it out through the hose guide.

Repairing a Bathtub Faucet

Required Tools:

- Adjustable wrench
- Utility knife
- Handle puller
- Bath socket wrench, Seat wrench

Required Materials:

- Stem valve repair parts
- Plumber's grease

Faucet Handle Puller

Faucet Socket Wrench Set

Seat Wrench Set

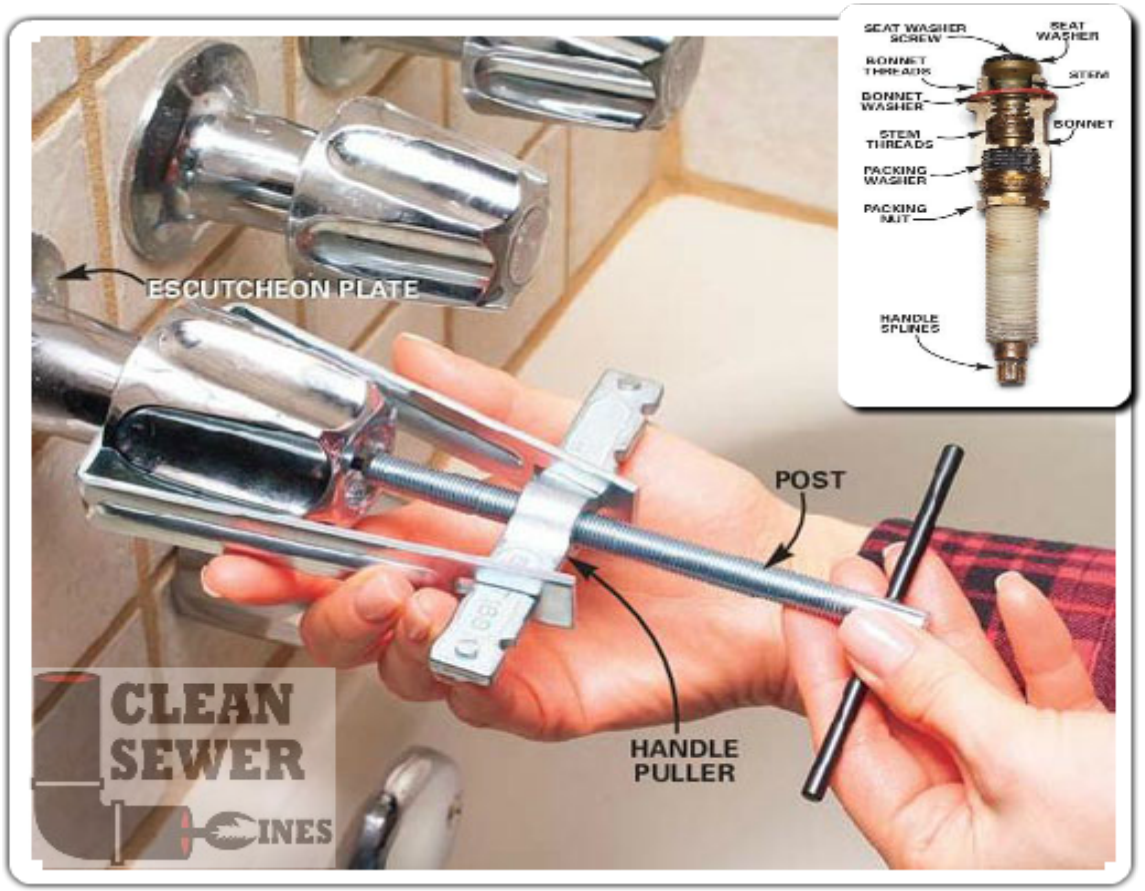

Compression Tub/Shower Stem

"It's $50 for fixing the sink, and $300 for babysitting your husband."

How to Fix a Leaky SHOWER Faucet

Water faucet leaks can be annoying to say the least, but they can also cause corrosion on fixtures if relentless dripping goes unrepaired.
Cheaper builders' grade faucets are generally ball style spigots which feature a ball joint that is rocked back and forth for hot or cold water.
With ball style spigots, the usual culprit for a leaky faucet is the inlet seat spring. These springs will lose their tension over time and start to wear and compress. Although they are not as prone to leaks as compression faucets, leaks can happen due to sediment buildup and worn springs and seals

Compression Tub/Shower Faucet

Price Pfister Tub Handles (Set)
Hot Handle Cap
Cold Handle Cap
Diverter Handle Cap
Handle Screws (Not Pictured)
960-110A Price Pfister Escutcheon
972-110 Escuthceon Nipple
974-374 Price Pfister Hot/Cold Tub Stems
Cap Thread Gaskets
Price Pfister Seats
910-385 Price Pfister Diverter Tub Stem

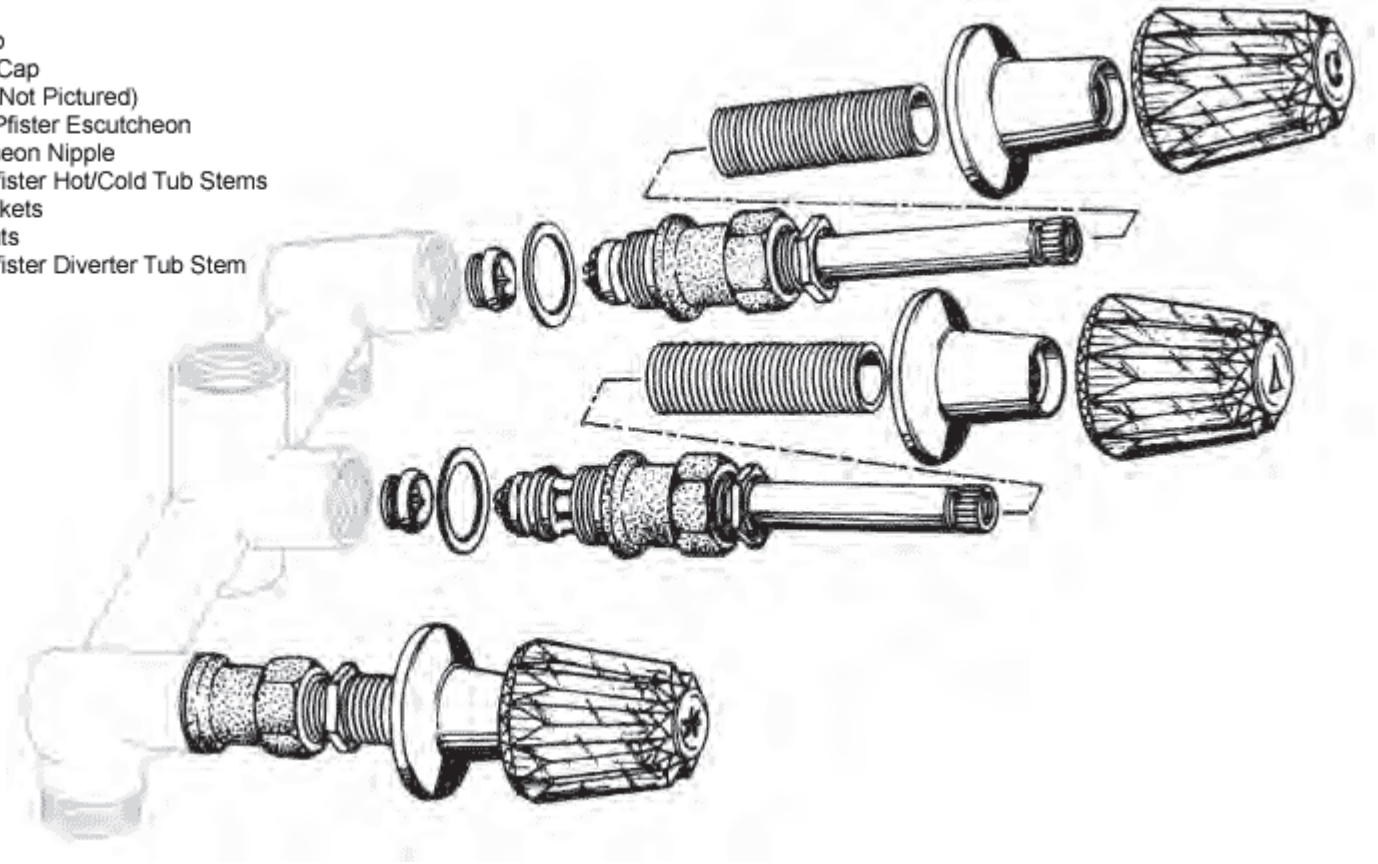

Single-Lever Tub/Shower Faucet

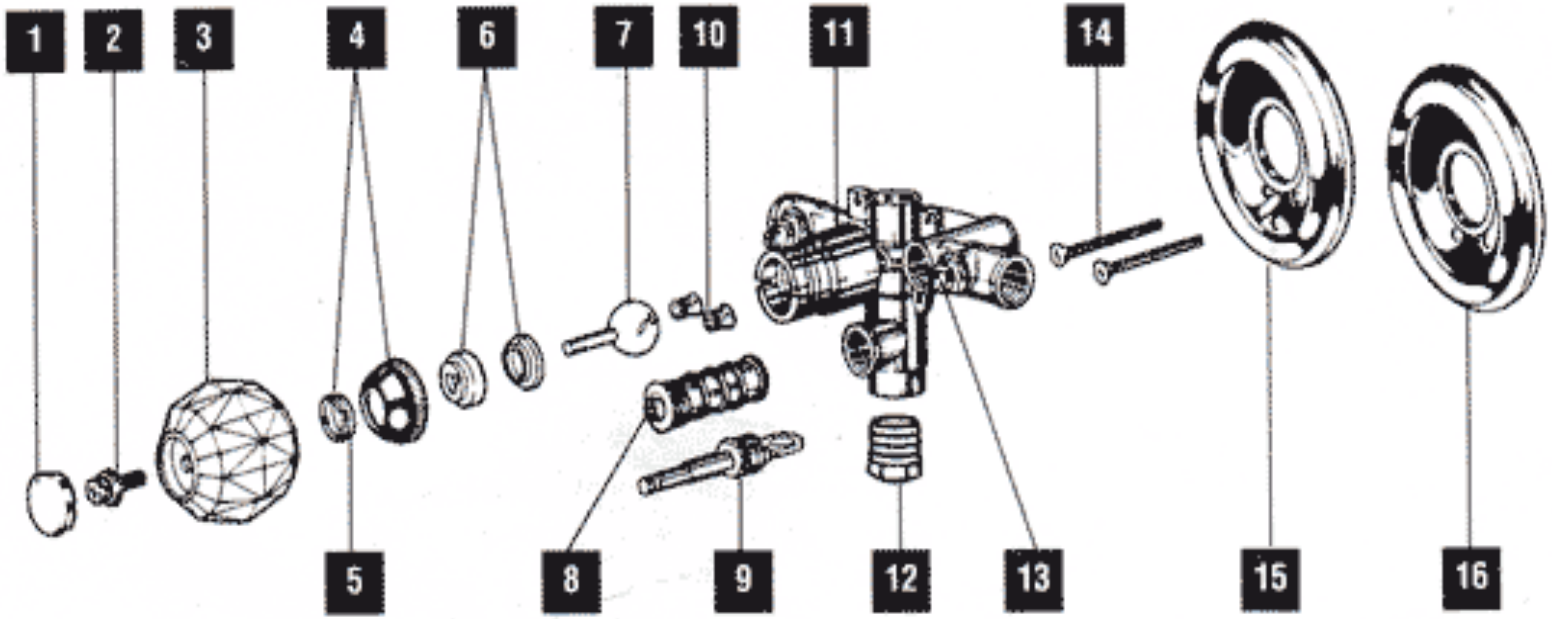

Steps for Repairing a Single-Lever Faucet

Step 1 - Shut Off the Water Source

Make sure the water is turned off by shutting off both the hot and cold valves underneath the sink area. After closing the valves, it's always a good idea to verify that the water is indeed off by turning the handle of the faucet.

Step 2 - Remove the Faucet Head

Remove the front cap on the ball by prying it off gently with a screwdriver to access the screw on the faucet handle. Unscrew the round faucet handle and reveal the ball joint by using your Phillips head screwdriver.

Step 3- Remove Ball Joint Assembly

Using your Allen head wrench, loosen up the ball joint head and it should slide off of the mount for you. When unscrewing any of the parts, pay careful attention not to scratch the finish of your faucet. Using your Allen wrench again, loosen the base cam assembly to remove the entire ball joint.

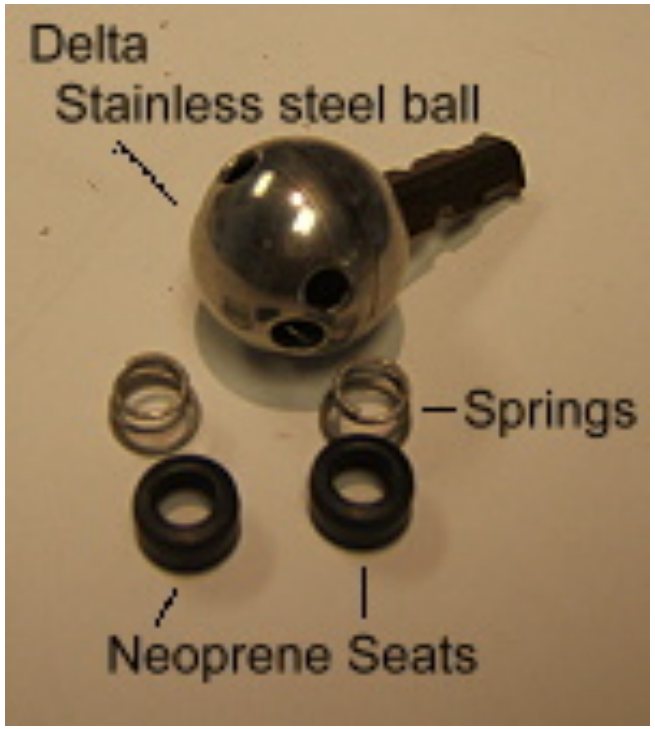

Step 4 - Remove Inlet Seat and Spring

Once the ball joint is removed, you can now access the inlet seat springs. Using your needle nose pliers, pry the seat spring off of the inlet. Place inside your parts bag and take the specific size spring to the hardware store to match up what parts you will need in order to complete the repair.

Step 5 - Install New Inlet Spring

Place your new inlet spring back inside the seat and use your needle nose pliers or your hand to work the seat back into holes. Make sure they are seated properly and are not kinked or crooked in any way to avoid any possible future leaks.

Step 6 - Reinstall Ball Joint

Reinstall your ball joint by taking a dab of plumbers grease and working it over the openings on the ball base. Place your ball joint back into the inlet by finding the groove on the ball joint base and make sure it gets seated over top of the inlet pin on the one side.

Step 7 - Reinstall Cam Assembly

Find the groove on the side of your new cam assembly and align the cam assembly down over the ball joint base of the groove. It's important to apply pressure and make sure this stays aligned while screwing it down over the sink head or you will have problems with your sink not sealing properly. Once screwed on, tighten up the cam assembly using your adjustable wrench.

Step 8 - Reinstall Ball Joint Mount

Using your Allen wrench, reinstall the ball joint mount by sliding it down over the ball joint and tighten up the ball joint head by turning it clockwise.

Step 8 - Reinstall Ball Joint Mount

Using your Allen wrench, reinstall the ball joint mount by sliding it down over the ball joint and tighten up the ball joint head by turning it clockwise.

Step 9 - Reinstall Faucet Handle and Sink Cap

Replace the round faucet handle over top of the ball joint mount and reinsert screw. Tighten with your Phillips head screwdriver. Replace front sink cap by snapping it back in place.

Step 10 - Reinstall Aerator and Turn Water Back On

Turn your water valves back on underneath your sink and replace the tap aerator onto the underside faucet tip by hand tightening counter clockwise. After turning the water back on, let your faucet run on hot and cold in order to flush out any grease residue that may still be left behind.

•All stems for drinking water applications should be100% compliant with the new

No-Lead Legislation.

•Stems are organized by Length or Manufacturer of the faucet.

- If you know or don't know the manufacturer of your faucet, you can search for your stem on line or in catalogs.

•Most stem photos are actual size and include the faucet manufacturer's name, plus a complete breakdown of all the components parts with the related part numbers.

No-lead legislation: what is it?

The new no-lead legislation, Federal Public Law 111-380, prohibits the sale of plumbing fixtures with a wetted surface area containing more than a weighted average of 0.25% lead.

This law virtually eliminates the lead content of pipes, pipe fittings and fixtures intended to convey or dispense water for drinking or cooking.

What does this mean you?

Your current inventory of any non-compliant brass products became obsolete on January 4, 2014.
A Non-compliant product is not grandfathered for continuous use and cannot be sold.

Which products are exempted from the no-lead products?

Those used exclusively for non-potable services such as manufacturing, industrial processing, irrigation, outdoor watering, or any other uses where the water is not anticipated to be for human consumption are not part of the no-lead law.

Questions??

This Concludes this Session

Thank you for your attendance